# ASSEMBLY INSTRUCTIONS

## FOR FILTON TEMPORARY CASK RACK

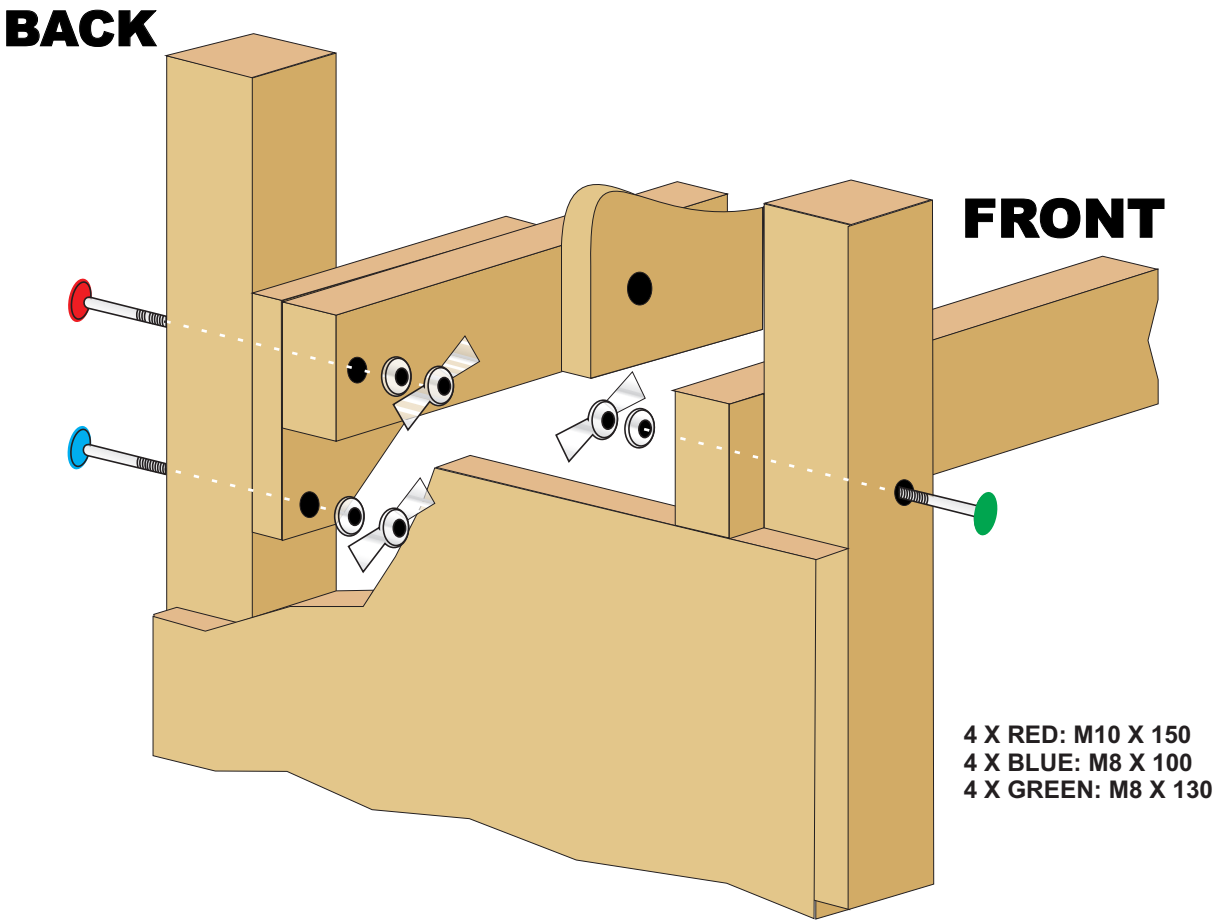


- ☐ **LOAD THE FOUR LOWER CASKS ON THE RACK FIRST & BROACH THEM PRIOR TO LOADING THE TOP ROW**
- ☐ **STAND ON FIRM LEVEL GROUND ONLY**

- ☐ **THIS RACK IS USED ENTIRELY AT HIRERS RISK**
- ☐ **DO NOT STAND ON RACK**
- ☐ **MAKE SURE THAT ALL PARTS ARE RETURNED TO FILTON**

TEL: 01323 416948
FILTON